1 ♥ CCTV
NET TRADING SRL
IMPORTATOR SISTEME DE SECURITATE
☎ 0736 355 553, 0736 355 554, 0722 334 700
eMAG Marketplace PARTENER

HIKVISION

DS-2CE56C0T-IT1F
HD 720p EXIR Turret Camera

Key Features

- 1 megapixel high performance CMOS
- Analog HD output, up to 720p resolution
- Day/Night switch
- DNR
- Smart IR
- Up to 20 m IR distance
- Switchable TVI/AHD/CVI/CVBS
- IP66

Specifications

Camera	
Image Sensor	1 MP CMOS Image Sensor
Signal System	PAL/NTSC
Effective Pixels	1296 (H) × 732 (V)
Min. illumination	0.1 Lux@(F1.2,AGC ON),0 Lux with IR
Shutter Time	1/25 (1/30) s to 1/50,000 s
Lens	3.6 mm (2.8 mm, 6 mm, 8 mm optional)
	Field of view: 70.9°(3.6 mm), 92°(2.8 mm), 56.7°(6 mm), 38.6°(8 mm)
Lens Mount	M12
Day & Night	ICR
Angle Adjustment	Pan: 0° to 360°, Tilt: 0° to 75°, Rotation: 0° to 360°
Synchronization	Internal synchronization
Video Frame Rate	720p@25fps/720p@30fps
HD Video Output	1 analog HD output
S/N Ratio	>62dB
General	
Operating Conditions	-40 °C to 60 °C (-40 °F to 140 °F), Humidity: 90% or less (non-condensation)
Power Supply	12 V DC±15%
Power Consumption	Max. 4 W
Protection Level	IP66
IR Range	Up to 20 m
Dimensions	Φ 110 mm × 93.2 mm (4.33" × 3.67")
Weight	350 g (0.77 lb.)

Order Model

DS-2CE56C0T-IT1F

Dimensions

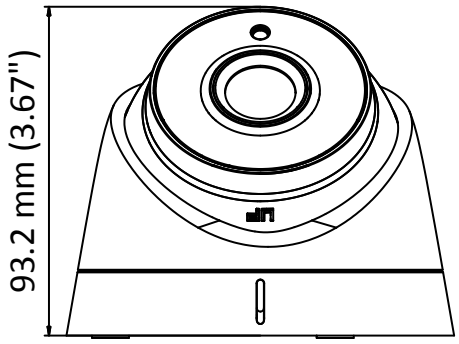

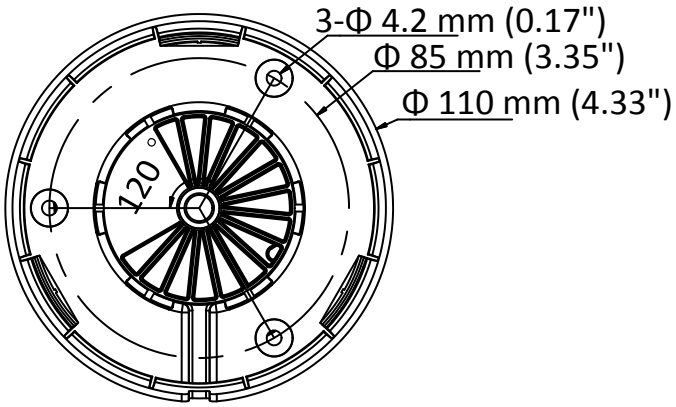

Accessories

DS-1272ZJ-110-TRS
Wall Mounting Bracket

DS-1275ZJ
Vertical Pole Mounting Bracket

DS-1276ZJ
Corner Mounting Bracket

DS-1H18
Video Balun

X41T
Camera Tester

DS-1280ZJ-S
Junction Box

DS-1281ZJ-S
Inclined Ceiling Mounting Bracket

Distributed by

1 CCTV NET TRADING SRL
IMPORTATOR SISTEME DE SECURITATE
0736 355 553, 0736 355 554, 0722 334 700

eMAG Marketplace PARTENER

Headquarters
No.555 Qianmo Road, Binjiang District,
Hangzhou 310051, China
T +86-571-8807-5998
overseasbusiness@hikvision.com

Hikvision USA
T +1-909-895-0400
sales.usa@hikvision.com

Hikvision Europe
T +31-23-5542770
saleseuro@hikvision.com

Hikvision Middle East
T +971-4-8816086
salesme@hikvision.com

Hikvision Russia
T +7-495-669-67-99
saleru@hikvision.com

Hikvision India
T +91-22-28469900
sales@pramahikvision.com

Hikvision Italy
T +39-0438-6902
info.it@hikvision.com

Hikvision France
T +33(0)1-85-330-444
info.fr@hikvision.com

Hikvision Spain
T +34-91-737-16-55
info.es@hikvision.com

Hikvision Poland
T +48-22-460-01-50
poland@hikvision.com

Hikvision UK
T +44-1628-9021-4
support.uk@hikvision.com

Hikvision Singapore
T +65-6684-4718
sg@hikvision.com

Hikvision Oceania
T +61-2-8599-4233
salesau@hikvision.com

Hikvision Hong Kong
T +852-2151-1761

© Hikvision Digital Technology Co., Ltd. 2015 | Data subject to change without notice | **0100001061107**