1 CCTV NET TRADING SRL
IMPORTATOR SISTEME DE SECURITATE
0736 355 553, 0736 355 554, 0722 334 700
eMAG Marketplace PARTENER

HIKVISION

DS-2CE16D0T-IRF
HD 1080p Bullet Camera

Key Features

- 2 megapixel high performance CMOS
- Analog HD output, up to 1080p resolution
- Day/Night switch
- Smart IR, up to 20 m IR distance
- Switchable TVI/AHD/CVI/CVBS
- IP66

Specifications

Camera	
Image Sensor	2MP CMOS image sensor
Signal System	PAL/NTSC
Frame Rate	PAL: 1080p@25fps NTSC: 1080p@30fps
Resolution	1920 (H) × 1080 (V)
Min. illumination	0.01 Lux@(F1.2,AGC ON), 0 Lux with IR
Shutter Time	1/25 (1/30) s to 1/50,000 s
Lens	2.8 mm, 3.6 mm, 6 mm fixed lens
Horizontal Field of View	103° (2.8 mm), 82.2° (3.6 mm), 54° (6 mm)
Lens Mount	M12
Day & Night	IR cut filter
Angle Adjustment	Pan: 0° to 360°, Tilt: 0° to 180°, Rotation: 0° to 360°
Synchronization	Internal synchronization
Menu	
AGC	Low/middle/high
Day/Night Mode	Smart/color/BW(Black and White)
Backlight Compensation	Yes
DWDR	Yes
Language	English, Chinese
Functions	Brightness, Sharpness, DNR, Mirror
Interface	
Video Output	1 HD analog output
Switch Button	TVI/AHD/CVI/CVBS
General	
Operating Conditions	-40 °C to 60 °C (-40 °F to 140 °F), Humidity 90% or less (non-condensation)
Power Supply	12 VDC±15%
Power Consumption	Max. 4 W
Ingress Protection	IP66
Material	Metal
IR Range	Up to 20 m
Dimensions	Φ 70 mm × 154.5 mm (Φ 2.76" × 6.08")
Weight	Approx. 400 g (0.88 lb.)

Order Model

DS-2CE16D0T-IRF

Dimensions

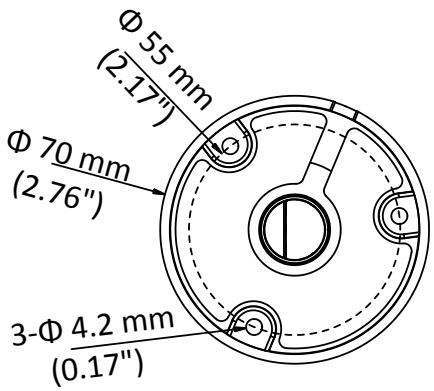

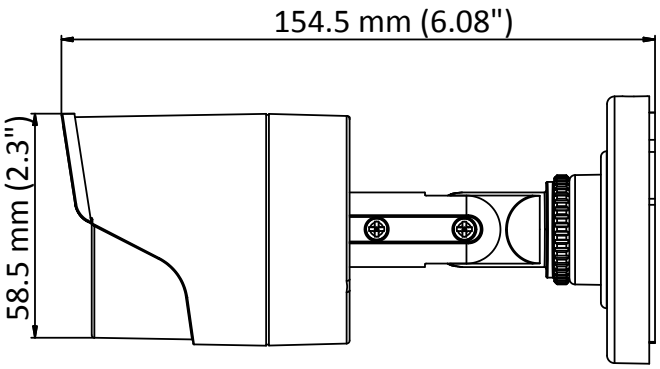

Accessories

DS-1280ZJ-XS

Junction Box

DS-1H18

Video Balun

Distributed by

1 ♥ CCTV NET TRADING SRL
IMPORTATOR SISTEME DE SECURITATE
☎ 0736 355 553, 0736 355 554, 0722 334 700

eMAG Marketplace PARTENER

Headquarters
No.555 Qianmo Road, Binjiang District,
Hangzhou 310051, China
T +86-571-8807-5998
overseasbusiness@hikvision.com

Hikvision USA
T +1-909-895-0400
sales.usa@hikvision.com

Hikvision Europe
T +31-23-5542770
saleseuro@hikvision.com

Hikvision Middle East
T +971-4-8816086
salesme@hikvision.com

Hikvision Russia
T +7-495-669-67-99
saleru@hikvision.com

Hikvision India
T +91-22-28469900
sales@pramahikvision.com

Hikvision Italy
T +39-0438-6902
info.it@hikvision.com

Hikvision France
T +33(0)1-85-330-444
info.fr@hikvision.com

Hikvision Spain
T +34-91-737-16-55
info.es@hikvision.com

Hikvision Poland
T +48-22-460-01-50
poland@hikvision.com

Hikvision UK
T +44-1628-9021-4
support.uk@hikvision.com

Hikvision Singapore
T +65-6684-4718
sg@hikvision.com

Hikvision Oceania
T +61-2-8599-4233
salesau@hikvision.com

Hikvision Hong Kong
T +852-2151-1761

© Hikvision Digital Technology Co., Ltd. 2015 | Data subject to change without notice | **0200001080507**