1 ♥ CCTV
NET TRADING SRL
IMPORTATOR SISTEME DE SECURITATE
☎ 0736 355 553, 0736 355 554, 0722 334 700
eMAG Marketplace PARTENER

HIKVISION

DS-2CD2435FWD-IW
3 MP EXIR Fixed Cube Network Camera

Key Features

- 2048 × 1536@30fps
- Ultra-low light
- IR: 10 m
- PIR: 10 m
- H.265+. H.265
- 120dB WDR
- Built-in Micro SD/SDHC/SDXC slot, up to 128G
- PoE
- EXIR
- Wi-Fi (Optional)

Specifications

Camera	
Image Sensor	1/2.8" Progressive Scan CMOS
Min. Illumination	Color: 0.005 Lux @ (F1.2, AGC ON), 0 Lux with IR; Color: 0.009 lux @(F1.6, AGC ON), 0 lux with IR
Shutter Speed	1/3 s to 1/100,000 s
Slow Shutter	Yes
Day & Night	IR Cut Filter
Digital Noise Reduction	3D DNR
WDR	120dB
3-Axis Adjustment	Pan: 0° to 360°, tilt: 0° to 90°, rotate: 0° to 360°
Lens	
Focal length	2.8 mm
Aperture	F1.6
FOV	Horizontal field of view: 98°, Vertical field of view: 72°, Diagonal field of view: 129°
Lens Mount	M12
IR	
IR Range	10 m
Wavelength	850nm
PIR	
Angle	Horizontal: 90°, Vertical: 80°
PIR Range	10 m
Compression Standard	
Video Compression	Main stream: H.265/H.264 Sub-stream: H.265/H.264/MJPEG Third stream: H.265/H.264
H.264 Type	Main Profile/High Profile
H.264+	Yes
H.265 Type	Main Profile
H.265+	Yes
Video Bit Rate	32 Kbps to 16 Mbps
Audio Compression	G722.1/G711ulaw/G711alaw/G726/MP2L2/PCM
Audio Bit Rate	64Kbps(G.711)/16Kbps(G.722.1)/16Kbps(G.726)/32-160Kbps(MP2L2)
Smart Feature-set	
Behavior Analysis	Line crossing detection, intrusion detection, unattended baggage detection, object removal detection
Face Detection	Yes
Region of Interest	Support 1 fixed region for main stream and sub-stream separately
Image	
Max. Resolution	2048 × 1536
Main Stream	50Hz: 25fps (2048 × 1536, 1920 × 1080, 1280 × 720) 60Hz: 30fps (2048 × 1536, 1920 × 1080, 1280 × 720)
Sub-Stream	50Hz: 25fps (640 × 360, 352 × 288) 60Hz: 30fps (640 × 360, 352 × 240)
Third Stream	50Hz: 25fps (1280 × 720, 640 × 360, 352 × 288)

	60Hz: 30fps (1280 × 720, 640 × 360, 352 × 240)
Image Setting	Rotate mode, saturation, brightness, contrast, sharpness adjustable by client software or web browser
Image Enhancement	BLC/3D DNR
Day/Night Switch	Auto/Schedule
Network	
Network Storage	Support Micro SD/SDHC/SDXC card (128G), local storage and NAS (NFS,SMB/CIFS), ANR
Alarm Trigger	Motion detection, video tampering, network disconnected, IP address conflict, HDD full, HDD error, PIR, illegal login
Protocols	TCP/IP, ICMP, HTTP, HTTPS, FTP, DHCP, DNS, DDNS, RTP, RTSP, RTCP, PPPoE, NTP, UPnP™, SMTP, SNMP, IGMP, QoS, IPv6
General Function	One-key reset, anti-flicker, three streams, heartbeat, mirror, password protection, privacy mask, watermark, IP address filter
API	ONVIF (PROFILE S, PROFILE G), ISAPI
Simultaneous Live View	Up to 6 channels
User/Host	Up to 32 users 3 levels: Administrator, Operator and User
Client	iVMS-4200, Hik-Connect, iVMS-5200
Web Browser	IE8+, Chrome 31.0-44, Firefox 30.0-51, Safari 8.0+
Interface	
Audio	1 built-in mic, 1 built-in speaker, mono sound
Communication Interface	1 RJ45 10M/100M self-adaptive Ethernet port
On-board storage	Built-in Micro SD/SDHC/SDXC slot, up to 128G
SVC	Support H.264 and H.265 encoding
Reset Button	Yes
Wi-Fi	
Wireless Standards	IEEE 802.11b/g/n
Frequency Range	2.412 GHz to 2.4835 GHz
Channel Bandwidth	20M/40M
Protocols	802.11b: DQPSK, DBPSK, CCK 802.11g/n: OFDM/64-QAM, 16-QAM, QPSK, BPSK
Security	WPA, WPA2
Transfer Rates	11b: 11Mbps, 11g: 54Mbps, 11n: up to 150Mbps
Wireless Range	50 m
Audio	
Environment Noise Filtering	Yes
Audio Sampling Rate	16 kHz
General	
Operating Conditions	-10 °C to +40 °C (14 °F to +104 °F), Humidity 95% or less (non-condensing)
Power Supply	12 VDC ± 20%, PoE (802.3af, class 3)
Power Consumption and Current	12 VDC, 0.44A, max. 7W PoE (802.3af, 36V to 57V), 0.2 A to 0.1 A, max. 7W
Interface Protection	TVS 2000V Lightning Protection, Surge Protection and Voltage Transient Protection
Material	Plastic
Dimensions	102.8 mm × 65.2 mm × 32.6 mm (4.05" × 2.57" × 1.28")
Weight	Camera: Approx. 128 g (0.28 lb.)

Available Model:

DS-2CD2435FWD-IW

Dimensions

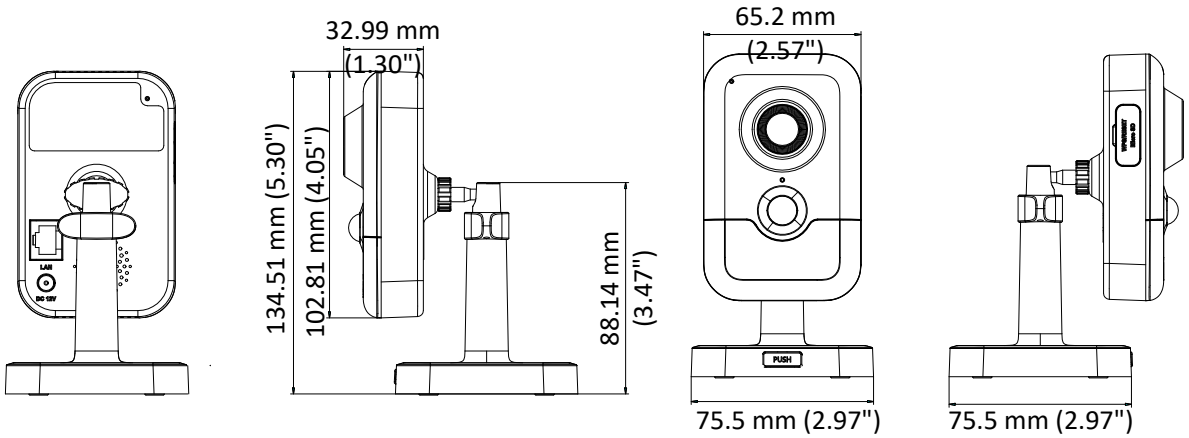

Distributed by

1 CCTV NET TRADING SRL
IMPORTATOR SISTEME DE SECURITATE
0736 355 553, 0736 355 554, 0722 334 700
eMAG Marketplace PARTENER

HIKVISION

Headquarters
No.555 Qianmo Road, Binjiang District,
Hangzhou 310051, China
T +86-571-8807-5998
overseasbusiness@hikvision.com

Hikvision USA
T +1-909-895-0400
sales.usa@hikvision.com

Hikvision Europe
T +31-23-55-42-770
info.eu@hikvision.com

Hikvision Middle East
T +971-4-8816086
salesme@hikvision.com

Hikvision Russia
T +7-495-669-67-99
saleru@hikvision.com

Hikvision India
T +91-22-28469900
sales@pramahikvision.com

Hikvision Italy
T +39-0438-6902
info.it@hikvision.com

Hikvision France
T +33(0)1-85-330-450
info.fr@hikvision.com

Hikvision Spain
T +34-91-737-16-55
info.es@hikvision.com

Hikvision Poland
T +48-22-460-01-50
poland@hikvision.com

Hikvision UK
T +01628-902140
support.uk@hikvision.com

Hikvision Singapore
T +65-6684-4718
sg@hikvision.com

Hikvision Oceania
T +61-2-8599-4233
salesau@hikvision.com

Hikvision Canada
T +1-909-895-0400
sales.usa@hikvision.com

Hikvision Korea
T +82-31-731-8841
sales.korea@hikvision.com

Hikvision Brazil
T +55 11 3318-0050
Latam.support@hikvision.com

Hikvision Africa
T +27 (10) 0351172
sale.africa@hikvision.com

Hikvision Hong Kong
T +852-2151-1761

© Hikvision Digital Technology Co., Ltd. 2017 | Data subject to change without notice | **20170826**